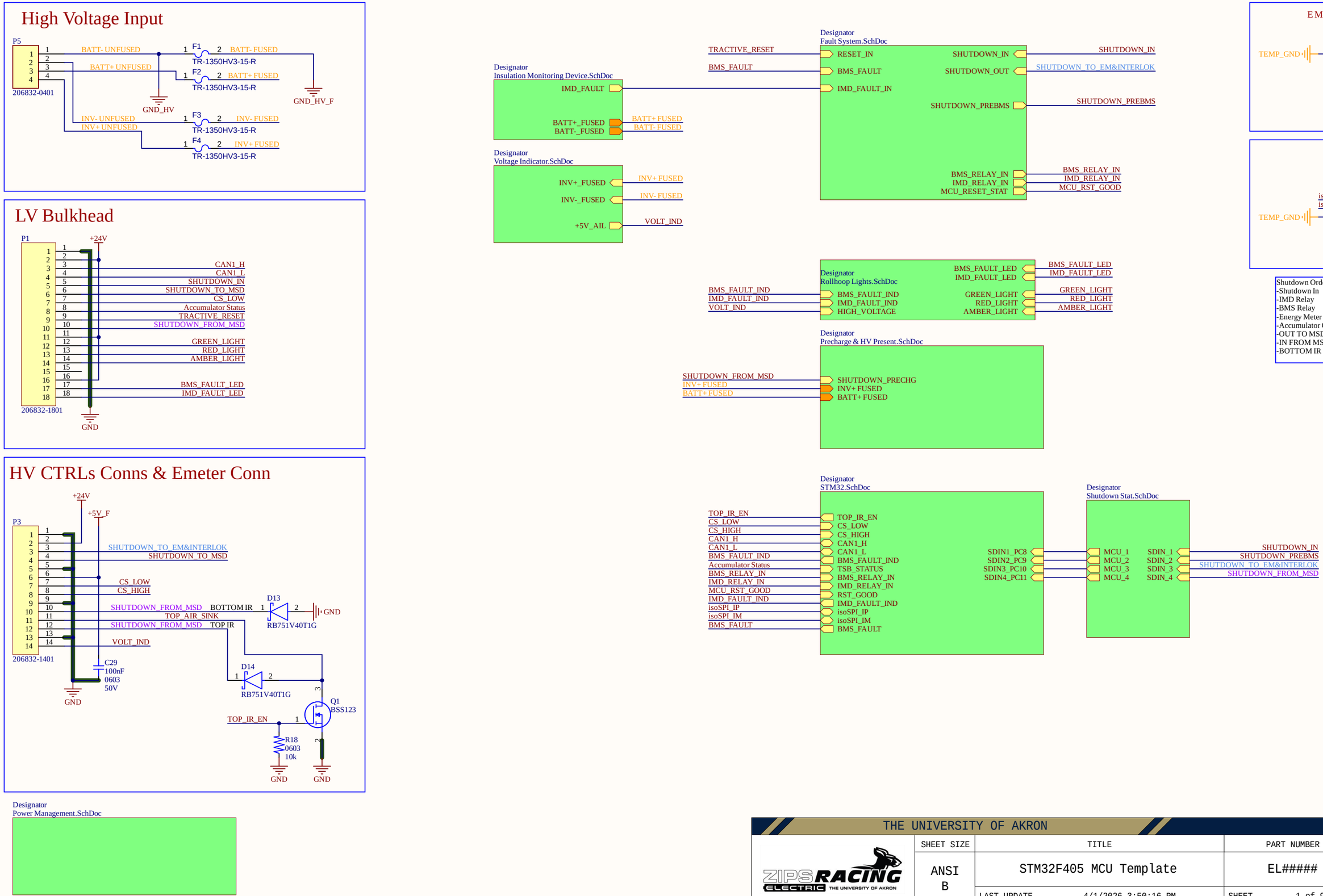

THE UNIVERSITY OF AKRON			
ZIPS RACING ELECTRIC THE UNIVERSITY OF AKRON	SHEET SIZE	TITLE	PART NUMBER	REVISION
	ANSI B	STM32F405 MCU Template	EL#####	AA
		LAST UPDATE 4/1/2026 3:50:16 PM	SHEET 1 of 9	

+5V Regulation (8V - 28V) @ 1A

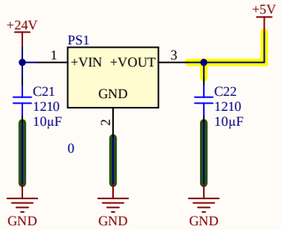

+3V3 Regulation

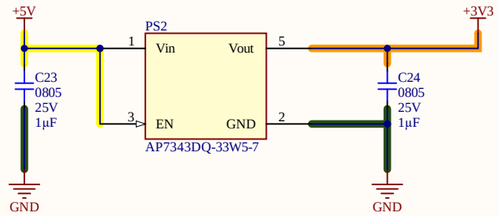

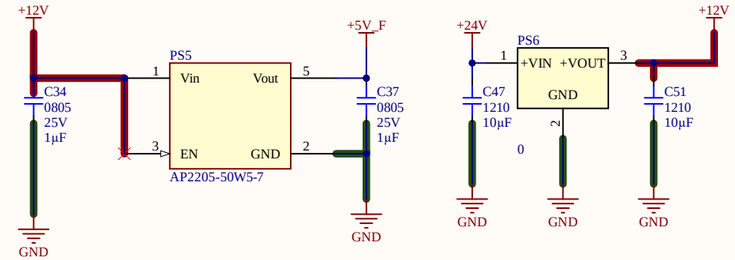

THE UNIVERSITY OF AKRON

SHEET SIZE	TITLE	PART NUMBER	REVISION
ANSI B	STM32F405 MCU Template	EL#####	AA
	LAST UPDATE 4/1/2026 3:50:16 PM	SHEET 2 of 9	

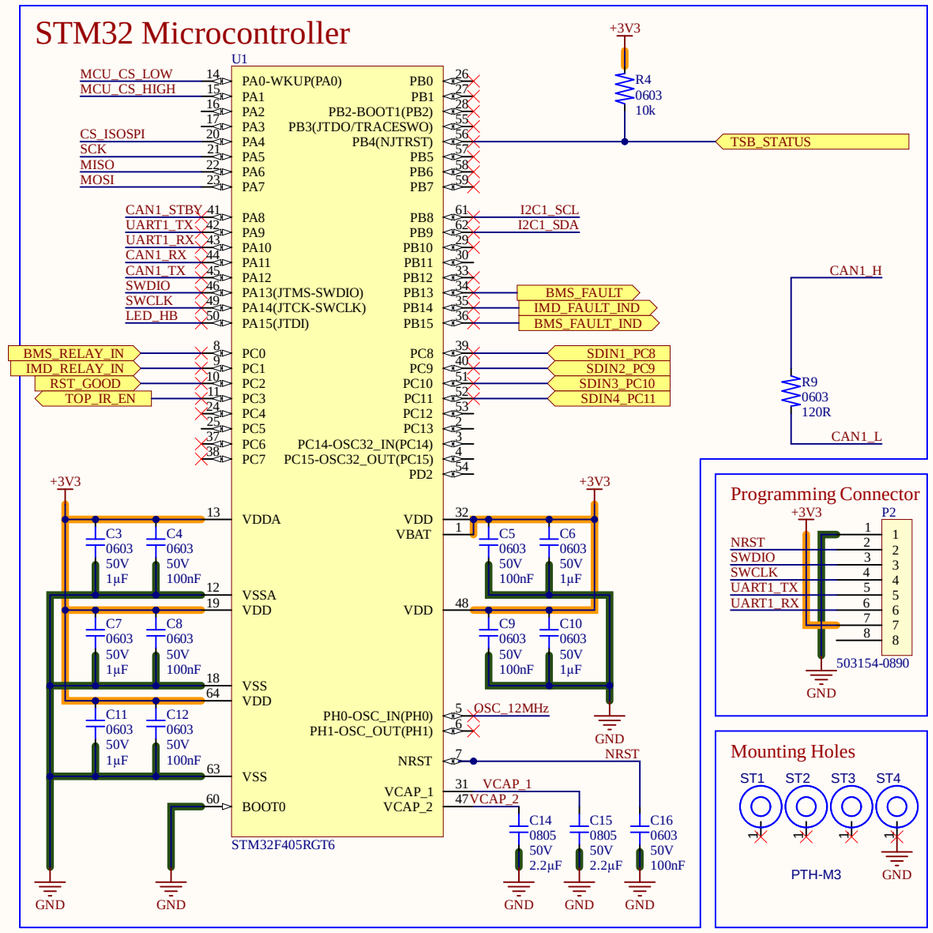

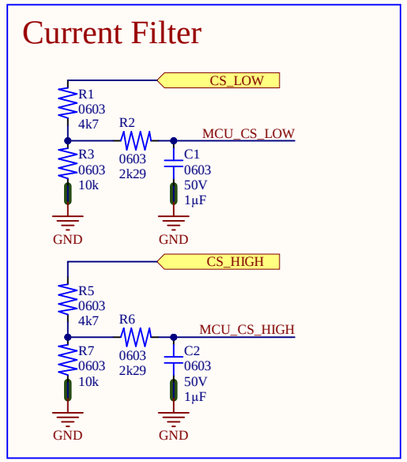

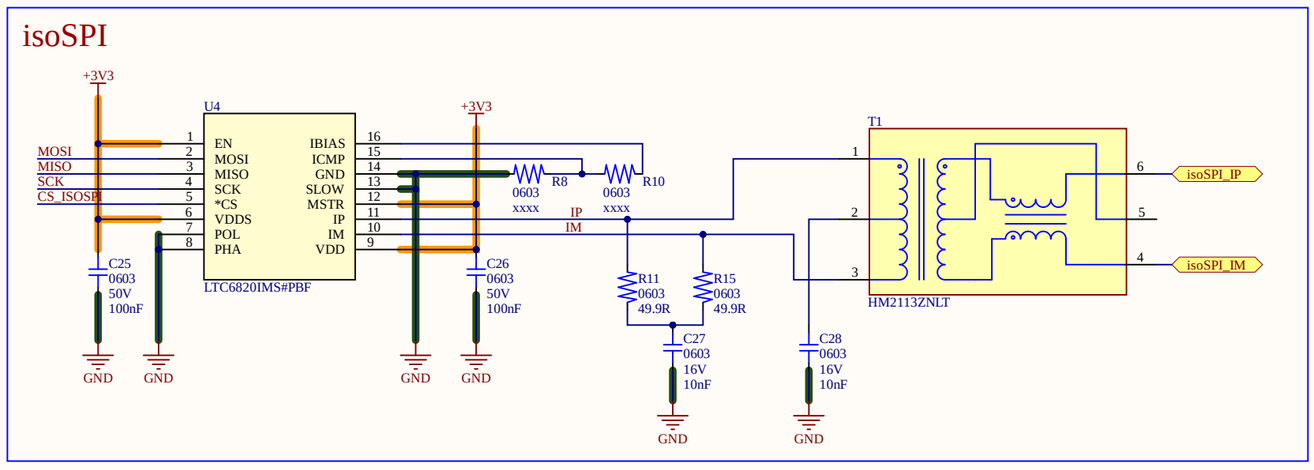

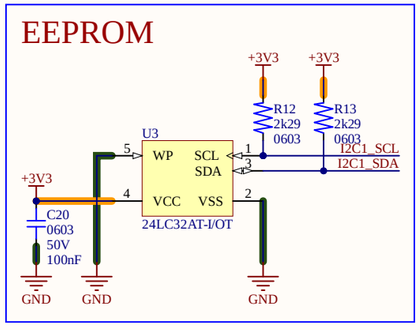

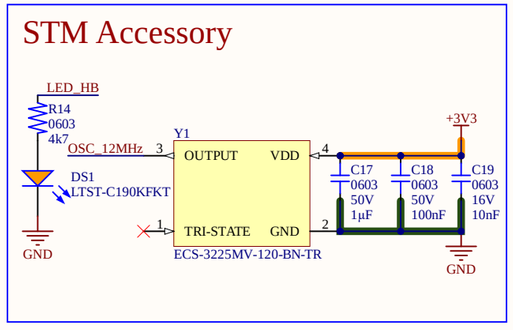

THE UNIVERSITY OF AKRON

SHEET SIZE	TITLE	PART NUMBER	REVISION
ANSI B	STM32F405 MCU Template	EL#####	AA
	LAST UPDATE 4/1/2026 3:50:16 PM	SHEET 3 of 9	

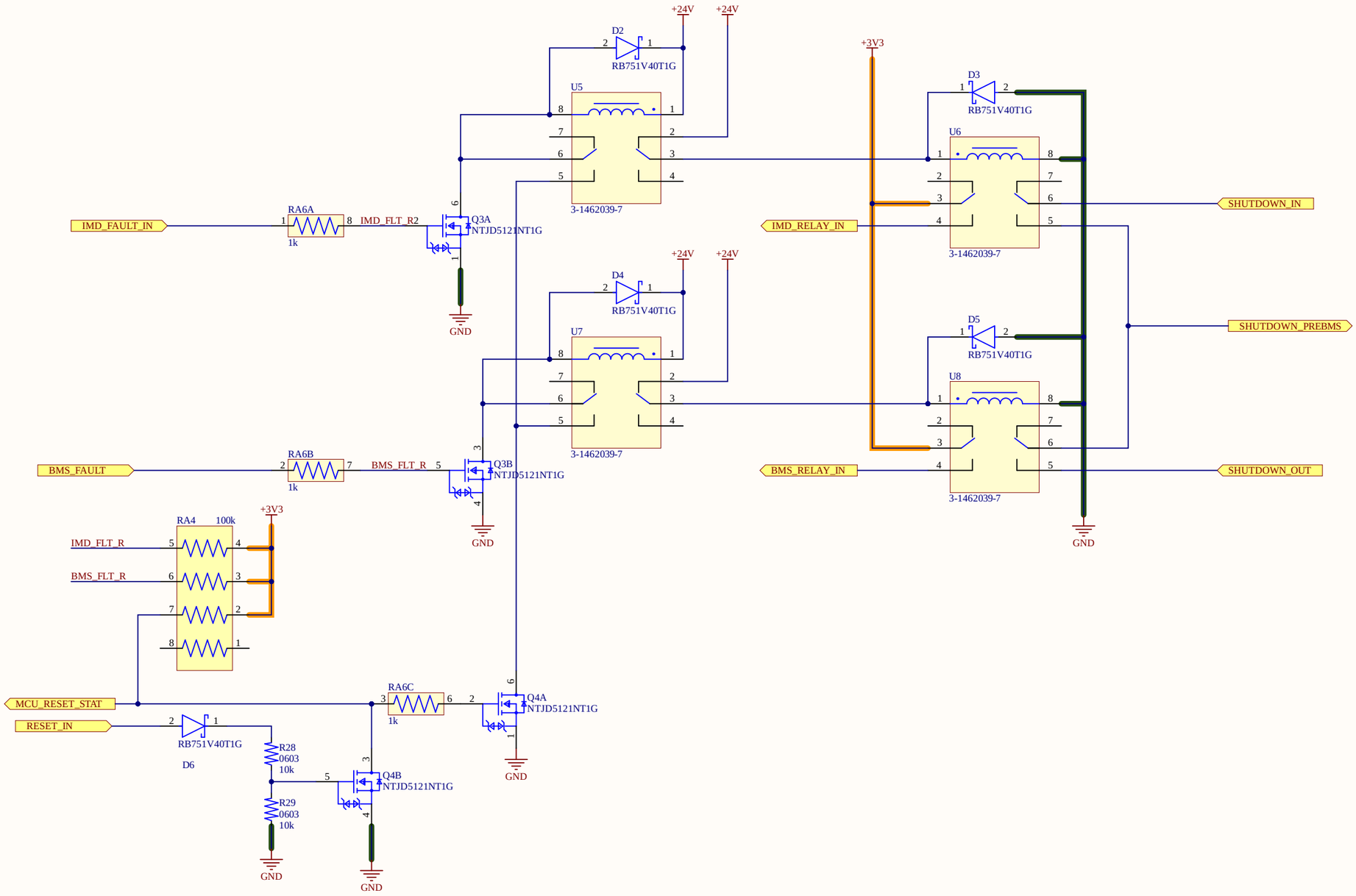

THE UNIVERSITY OF AKRON

SHEET SIZE	TITLE	PART NUMBER	REVISION
ANSI B	STM32F405 MCU Template	EL#####	AA
	LAST UPDATE 4/1/2026 3:50:17 PM	SHEET 4 of 9	

EV.5.11.5 The Tractive System Status Indicator must show when the GLV System is energized:

	Condition	Green Light	Red Light
a.	No Faults	Always ON	OFF
b.	Fault in one or the two: BMS **EV.7.3.5** or IMD **EV.7.6.5**	OFF	Flash 2 Hz to 5 Hz, 50% duty cycle

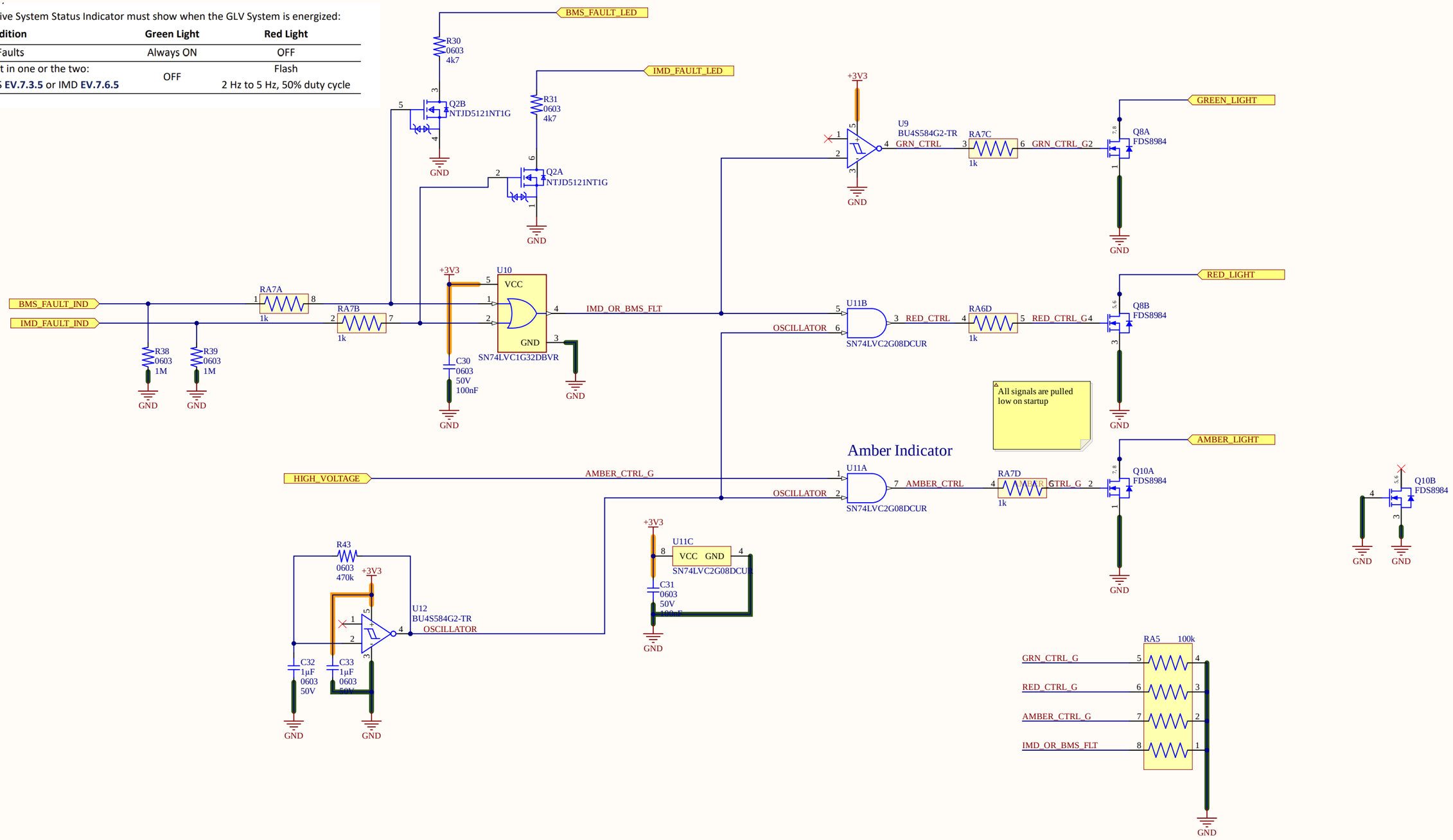

THE UNIVERSITY OF AKRON

SHEET SIZE	TITLE	PART NUMBER	REVISION
ANSI B	STM32F405 MCU Template	EL#####	AA
	LAST UPDATE 4/1/2026 3:50:17 PM	SHEET 5 of 9	

Precharge Enable Relay

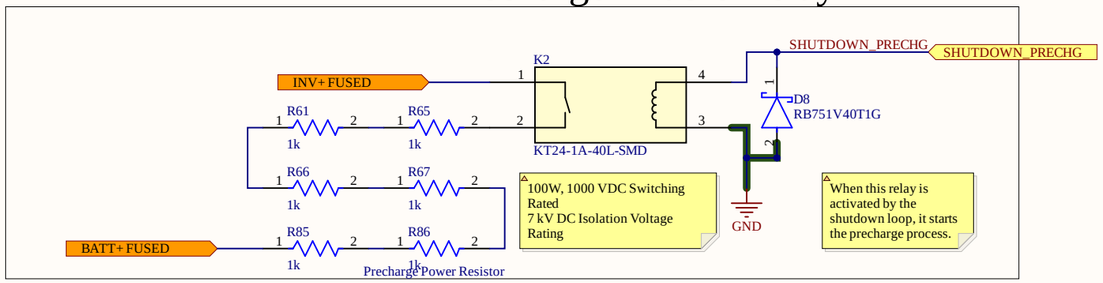

THE UNIVERSITY OF AKRON

SHEET SIZE	TITLE	PART NUMBER	REVISION
ANSI B	STM32F405 MCU Template	EL#####	AA
	LAST UPDATE 4/1/2026 3:50:17 PM	SHEET 6 of 9	

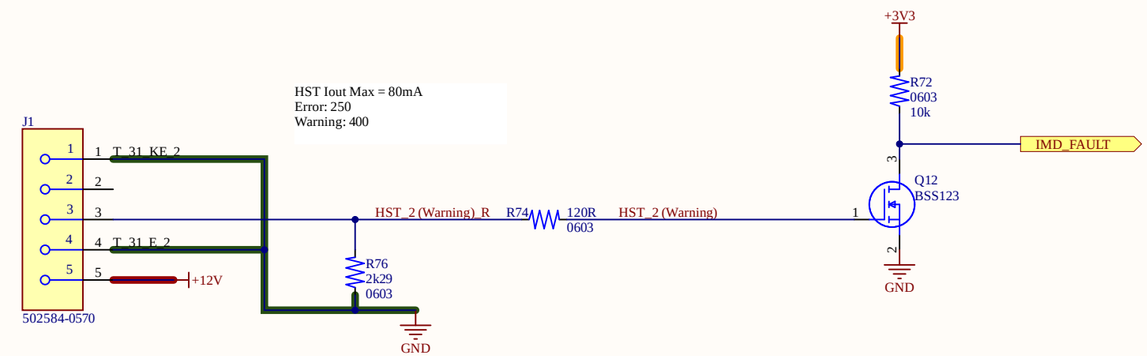

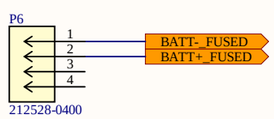

THE UNIVERSITY OF AKRON

SHEET SIZE	TITLE	PART NUMBER	REVISION
ANSI B	STM32F405 MCU Template	EL#####	AA
	LAST UPDATE 4/1/2026 3:50:17 PM	SHEET 7 of 9	

Voltage Indicator Light

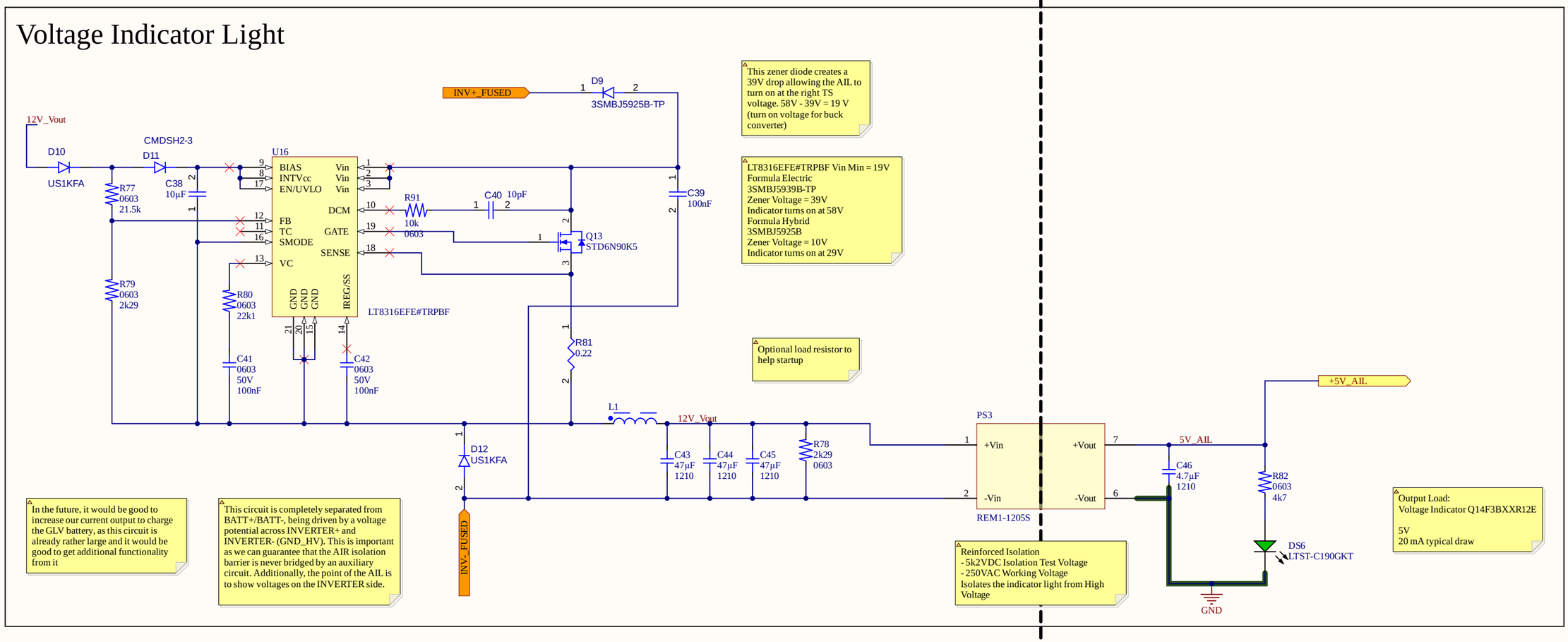

This zener diode creates a 39V drop allowing the AIL to turn on at the right TS voltage. 58V - 39V = 19 V (turn on voltage for buck converter)

LT8316EFE#TRPBF Vin Min = 19V
Formula Electric
3SMBJ5939B-TP
Zener Voltage = 39V
Indicator turns on at 58V
Formula Hybrid
3SMBJ5925B
Zener Voltage = 10V
Indicator turns on at 29V

Optional load resistor to help startup

In the future, it would be good to increase our current output to charge the GLV battery, as this circuit is already rather large and it would be good to get additional functionality from it

This circuit is completely separated from BATT+/BATT-, being driven by a voltage potential across INVERTER+ and INVERTER- (GND_HV). This is important as we can guarantee that the AIR isolation barrier is never bridged by an auxiliary circuit. Additionally, the point of the AIL is to show voltages on the INVERTER side.

Reinforced Isolation
- 5k2VDC Isolation Test Voltage
- 250VAC Working Voltage
Isolates the indicator light from High Voltage

Output Load:
Voltage Indicator Q14F3BXXR12E

5V
20 mA typical draw

THE UNIVERSITY OF AKRON

SHEET SIZE	TITLE	PART NUMBER	REVISION
ANSI B	STM32F405 MCU Template	EL#####	AA
	LAST UPDATE 4/1/2026 3:50:17 PM	SHEET 8 of 9	

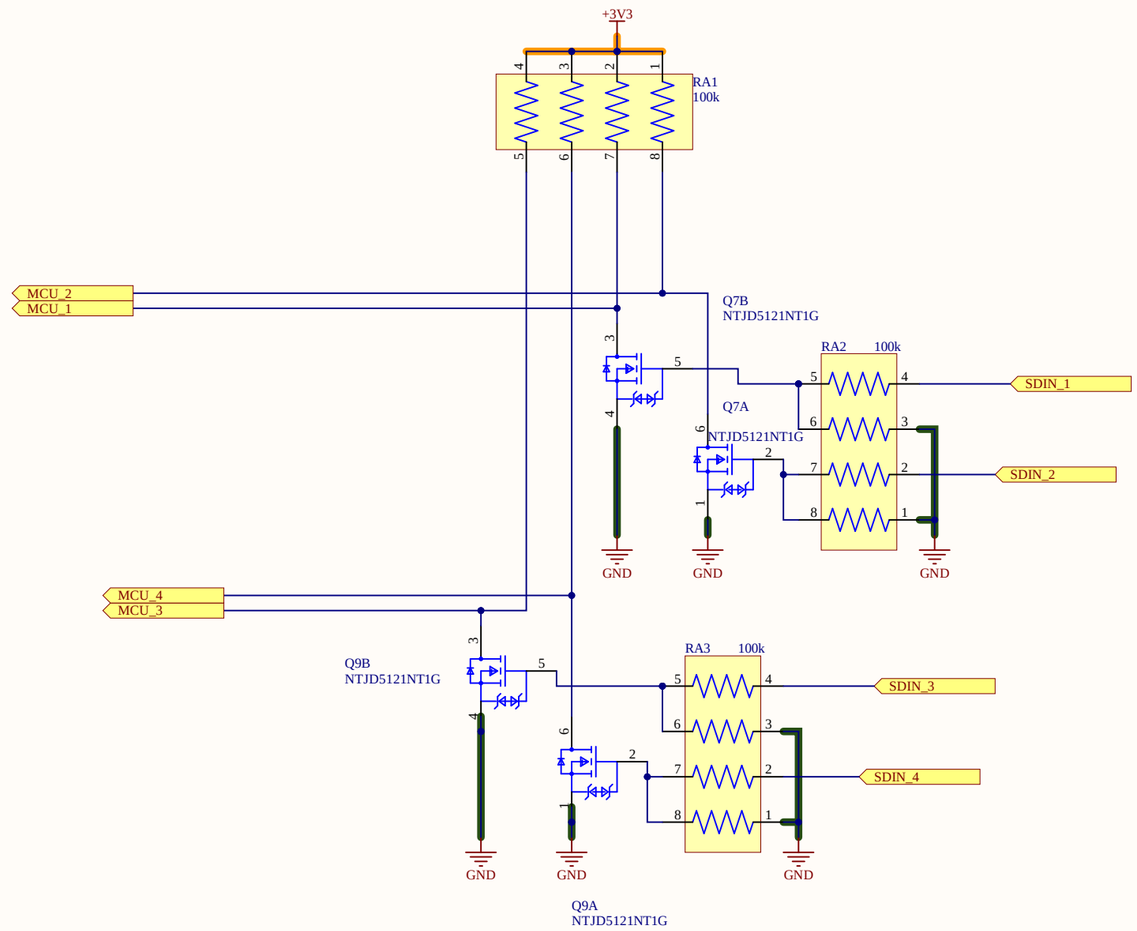

THE UNIVERSITY OF AKRON

SHEET SIZE	TITLE	PART NUMBER	REVISION
ANSI B	STM32F405 MCU Template	EL#####	AA
	LAST UPDATE 4/1/2026 3:50:17 PM	SHEET 9 of 9	